BLAUPUNKT

User Manual

VILLA OUTDOOR STATION
BP-VDP-OS448-G

Enjoy it.

Attentions

1、Please keep devices away from strong magnetic field , high temperature , wet environment ;

2、Please do not fall the devices to the ground or make them get hard impact ;

3、Please do not use wet cloth or volatile reagent to wipe the devices ;

4、Please do not disassemble the devices.

Content

Chapter 1 Overview 1
1.1 Function 1
1.2 Parameter 1
Chapter 2 Product Introduction 2
2.1 Product View 2
2.2 Product Dimensions 3
2.3 Interface Introduction 4
Chapter 3 Installation 5
3.1 Installation Height 5
3.2 Installation Steps 6
3.3 Lock Wiring 7
Chapter 4 User Instruction 8
4.1 Call Guard Station 8
4.2 Unlock 8
4.3 Unlock Time Setting 8
4.4 Card Management 8
4.5 Door Status Alarm 9

Chapter 1 Overview

The product is the single/ two buttons outdoor station of the H Series Digital System VDP. By using standard CAT5 cables, it makes visual intercom call to guard station possible. Besides, it supports IC access control.

1.1 Function

- **Support IC card**
- **Support calling to guard unit**
- **Adjustable unlock time**
- **Door status detection, and unlock state timeout alarm**
- **Support normal open/close unlock output**
- **Support online update**

1.2 Parameter

Working Parameter

Working Voltage：DC 24V/POE 48V

Static Current:≤ 65mA 24V/45mA 48VPoE

Working Current： 130mA DC24V/60mA 48VPOE

Working Temperature : -25℃~55℃

Storage Temperature: -40℃~70℃

Dimension(H/W/D)：168×86×33.5mm

Camera

Type :CMOS

Pixel：2MP

View Angle：Diagonal 78°

Relative illumination：48%

Focal Length：2.2mm

Fill-in Light Type: White

Chapter 2 Product Introduction

2.1 Product View

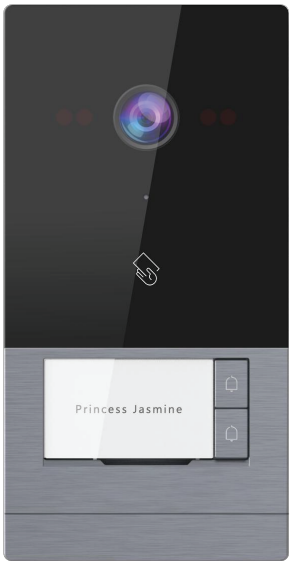

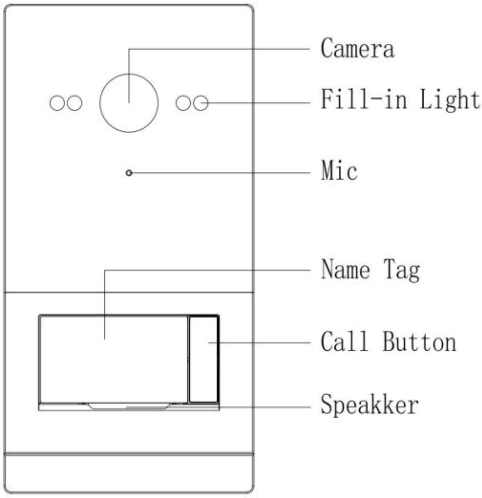

2.2 Product Dimensions

Unit：mm

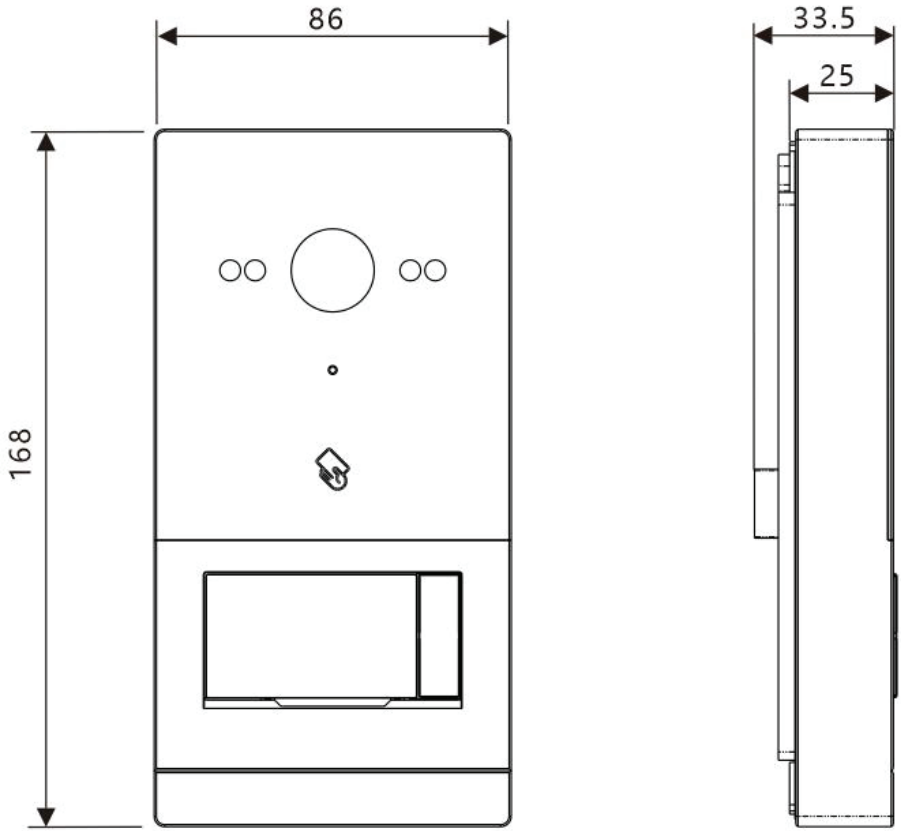

2.3 Interface Introduction

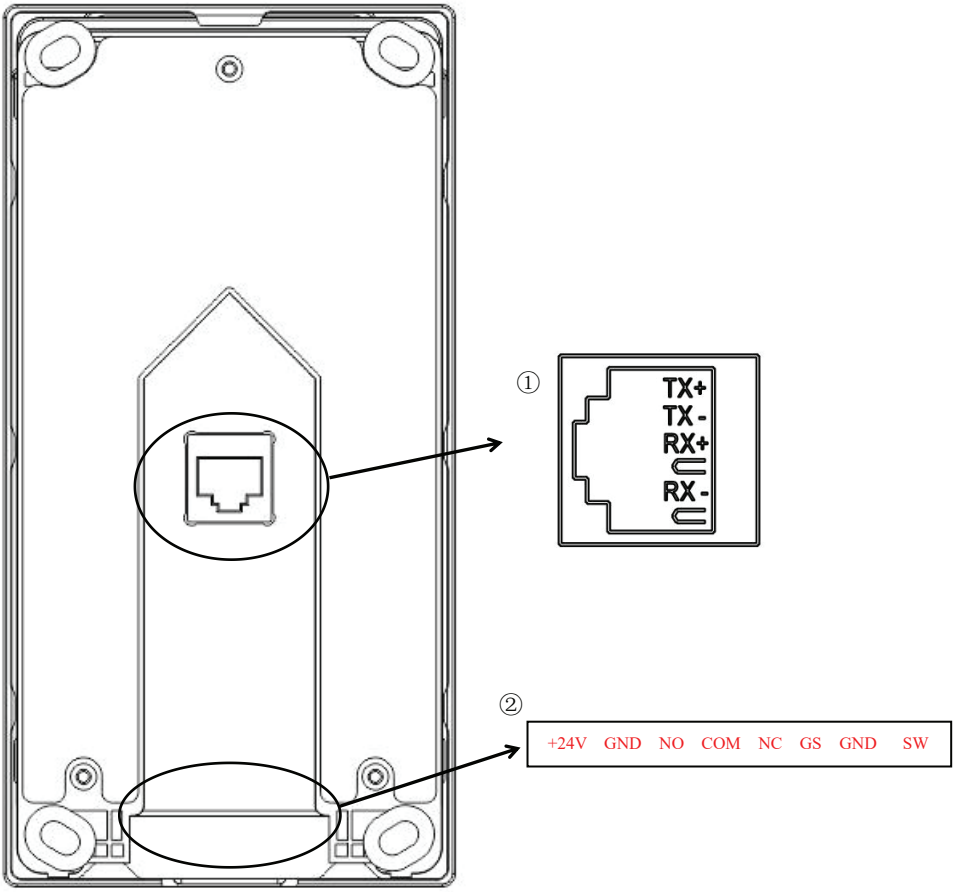

Interface ①

RJ45 Network Interface ： Connecting 48V PoE Switch（1236 Communication、4578Power supply）

Interface ②

+24V GND ：Independent power supply interface

NO COM NC ：Normal open/close interface

GS GND ：Door status detection interface

SW：Indoor unlocking interface

Chapter 3 Installation

3.1 Installation Height

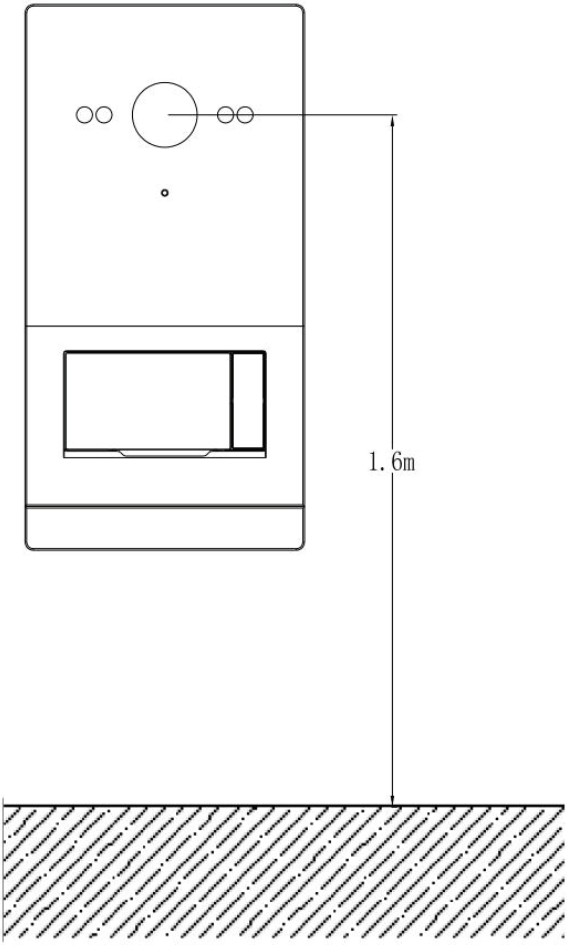

Recommended installation height :The camera is 1.6 meters above the ground

3.2 Installation Steps

Step 1: Drill holes on the wall according to the installation size (149.5×64.5mm), fix the screw plug into the hole (it is recommended to align the device to the center of the reference line), then place the device and fasten with self-tapping screws(Pic 2)

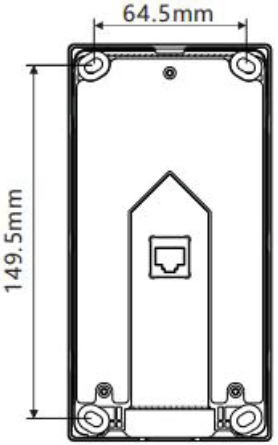

Pic 1

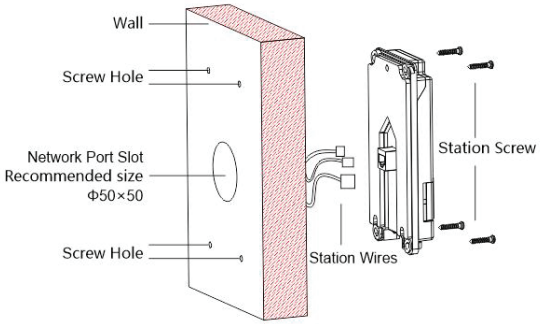

Pic 2

Step 2: Fill the paper with apartment's information, and install it in the name tag area, then complete the wiring (Pic 3)

Step 3: Assemble the metal case onto the device, and fasten with plum blossom screw(Pic 4).

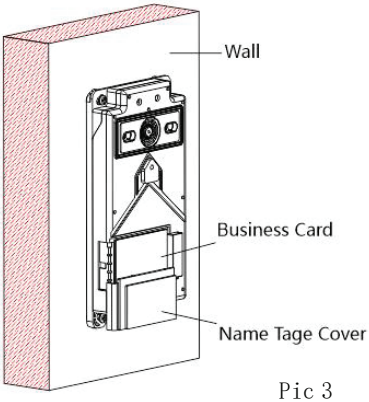

Pic 3

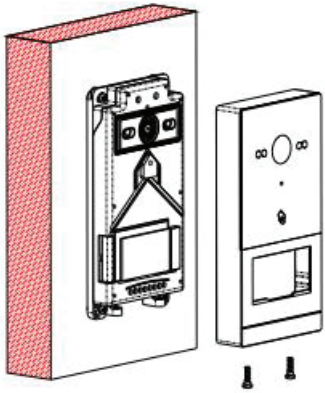

Pic 4

3.3 Lock Wiring

- **Signal Unlocking Wiring**

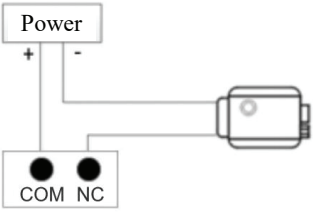

Normal Closed Wiring Mode (12V Electric Lock)

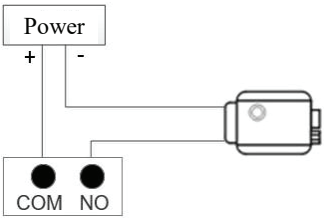

Normal Open Wiring Mode（Relay Lock）

【Note】Do not power up the electric lock from outdoor station.

- **Exit button unlock wiring**

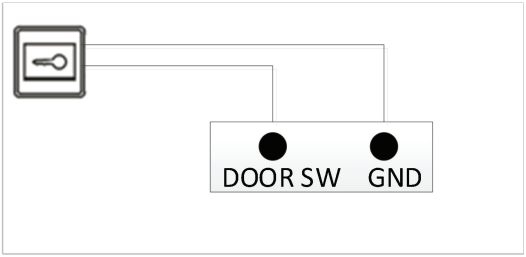

【Note】This wiring is non-polarity.

Chapter 4 User Instruction

4.1 Call Guard Station

By long/short press the call button of outdoor station , visitor starts to call the guard unit whose ringtone will echo back. If there's no answer in 30 seconds, the call will be ended.

4.2 Unlock

1) Access IC card unlock

Swipe the registered IC card to the card reading area on outdoor station to open the door.

2) Unlock during monitoring

When outdoor station is being monitored by indoor station or guard station, the door can be opened by pressing the unlock key on indoor station or guard station .

3) External push button unlock

As there are interface for integration of external push buttons, when this is connected, a normal push button can be used to unlock the door.

4.3 Unlock Time Setting

Default unlock time is 5S, unlock time can be set through 'GVS Config Tool'. Unlock time range:1~30 seconds.

4.4 Card Management

The maximum supported quantity of management card is 10,000 pcs. Card registration, card deletion, card data emptying and card property checking can be managed by PC software or guard station. Besides, single card or card in-batches can be registered or exported by PC software.

*N*ote: outdoor station will enter registering mode while PC software is registering card in-batches. In this case, there will be no response either swiping card or pressing any call button, and guard unit or indoor monitor will prompt message of busy.

4.5 Door Status Alarm

When the door is detected opened over 120 seconds by outdoor station, outdoor station and guard station will ring out the alarm alert with the information of door unlock timeout. Interface on guard unit page is shown as below :

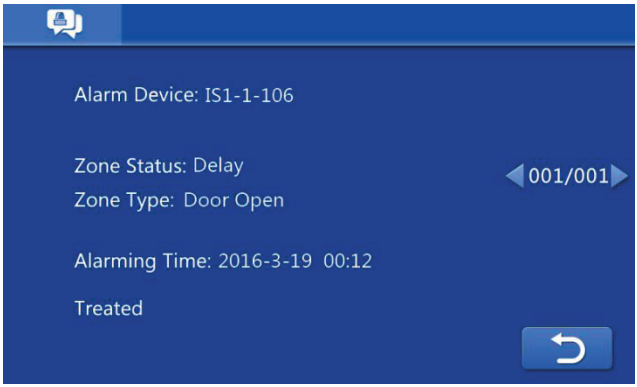

Alarm interface of door unlock timeout

For Inquiries, Please contact:

Security Shop doo
Vladimira Nazora 1, 11077 Novi Beograd
Tel: +381 11 318 68 68
www.securityshop.rs

BLAUPUNKT and the BLAUPUNKT logo are trademarks of TALISMAN BRANDS (Luxembourg) S.A.R.L.and are used under license from Talisman Brands, Inc. BLAUPUNKT licensees are solely responsible for the BLAUPUNKT branded products manufactured, distributed and sold under license.
www.blaupunkt.com