BLAUPUNKT

User Manual

NETWORK CABINET IN MOLD TYPE
BP-NC42UW6D8



Enjoy it.

SUPPLIED PARTS AND HARDWARE

A	B	C	D	E	F
16X M4x8mm Screw	40X M5x12mm Cage nut&Screw	16X M8x12mm Screw	16X M8 Flange nut	2X Tire key	4X M12 Adjustable feet

G	H	I
16X M5x12mm Self-tapping screw	1X Allen key	4X Castor

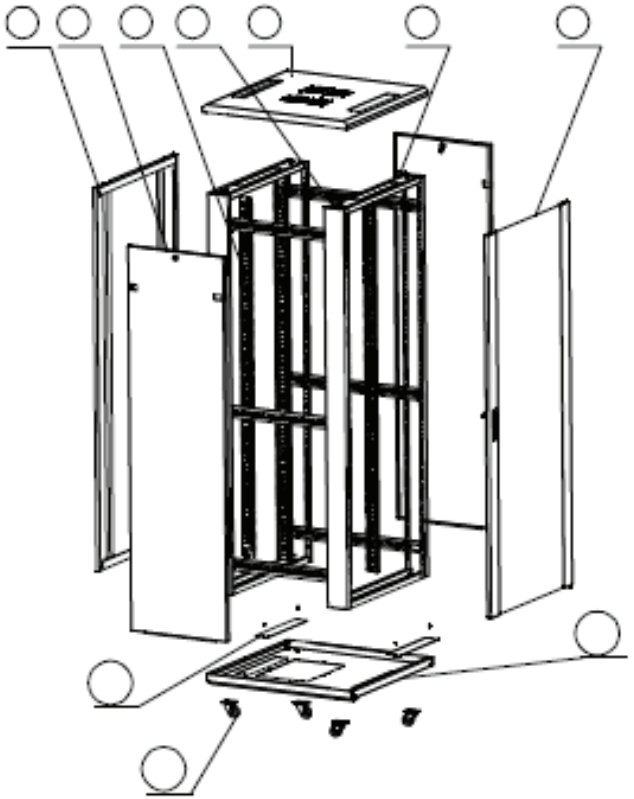

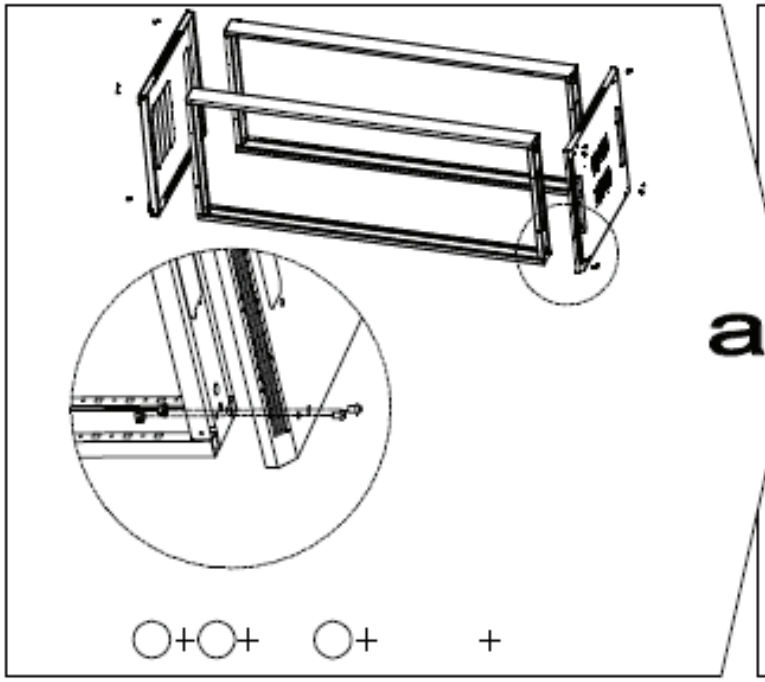

a

○+○+ ○+ +

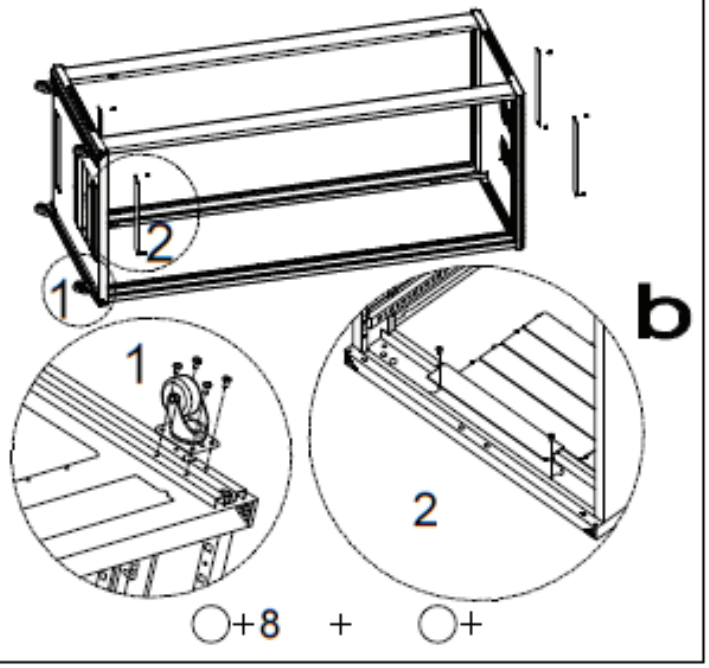

b

○+8 + ○+

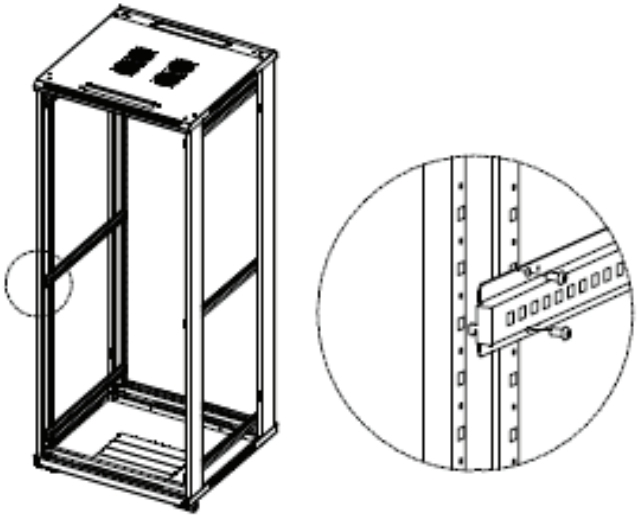

c

○+
(○+

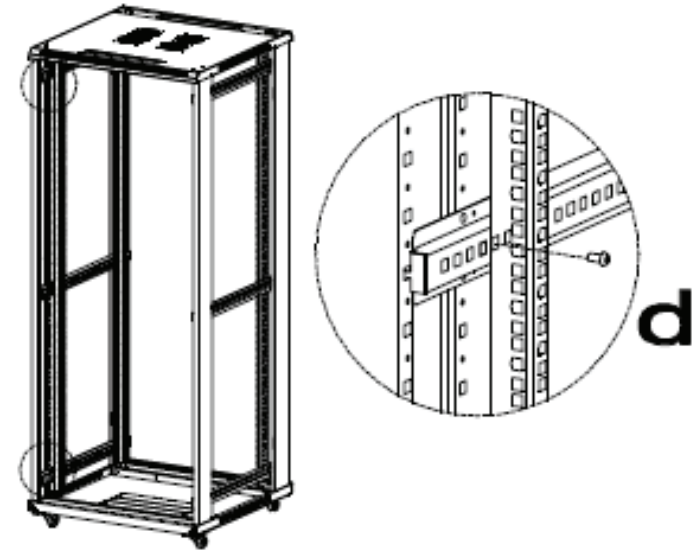

d

○+

e

f

g

h

For Inquiries, Please contact:

Security Shop doo
Vladimira Nazora 1,
11077 Novi Beograd, Serbia
Tell: +381 11 318 68 68
office@securityshop.rs

Imported/Distributed by Security Shop doo
BLAUPUNKT and the BLAUPUNKT logo are trademarks of
TALISMAN BRANDS (Luxembourg) S.A.R.L. and are used
under license from Talisman Brands, Inc.
BLAUPUNKT licensees are solely responsible for
the BLAUPUNKT branded products manufactured,
distributed and sold under license.
www.blaupunkt.com